REV	DATE	DESCRIPTION
X1	11/13-2026	New drawing

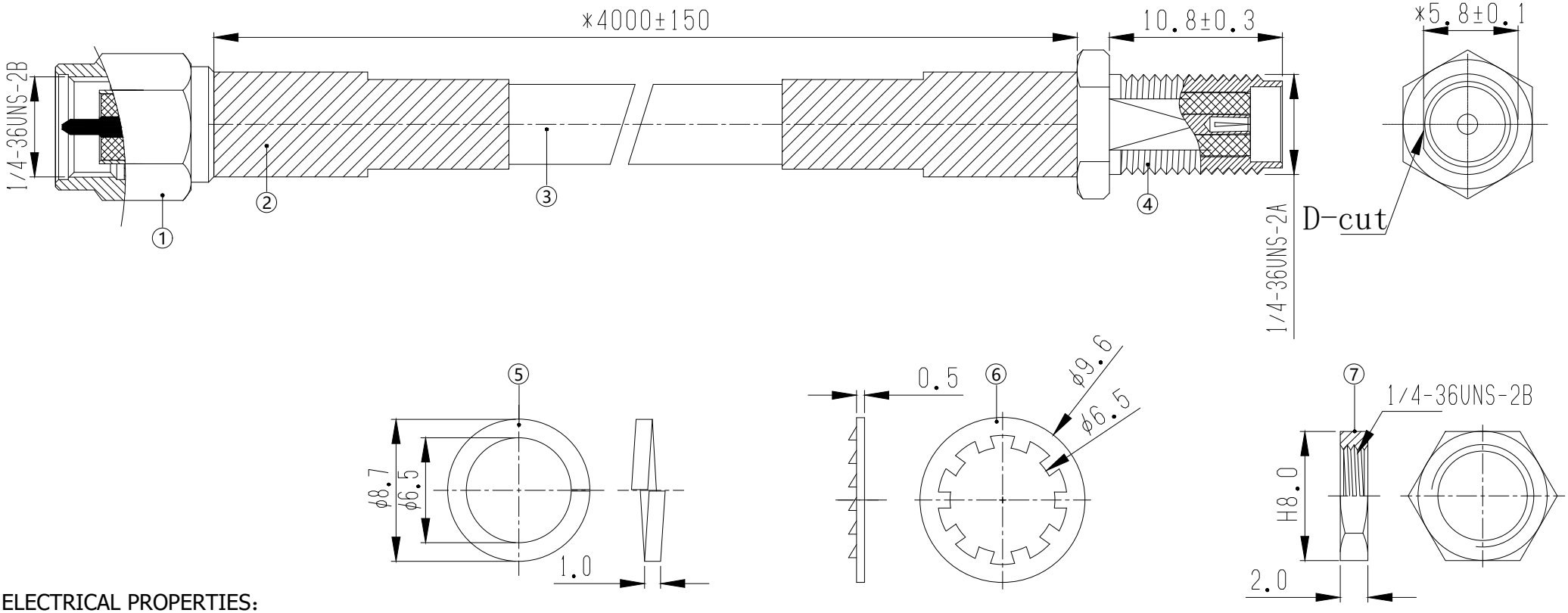

1.ELECTRICAL PROPERTIES:
- 1.1 Frequency Range.....DC~6GHz
- 1.2 Impendance.....50 Ohm Nominal
- 1.3 VSWR.....≤2.0

2.Nuts and washers are packaged separately
螺母、垫片等配件单独包装出货

3.These Products are in conformity with ROHS2.0

4.Strict sizes are marked with "*",and () for reference

NO	DESCRIPTION	Q'TY	REMARK
7	Nut — Brass;Gold Plated	1	
6	Washer — Brass;Gold Plated(单面翻边)	1	
5	Spring washer — Brass;Gold Plated	1	
4	Connector — SMA Female; Gold-Plated	1	
3	Cable — LMR240 Cable; Color: Black	1	
2	Tube — Heat Shrink Tube;Black	2	
1	Connector — SMA Male; Gold-Plated	1	

CUSTOMER'S SINGATURE

XXX.	±3.0
XX.	±2.0
X.	±1.0
.X	±0.5
.XX	±0.3

APPROVED

CHECKED

DRAWING yl

CUSTOMER:

PART NO:

PART NAME: SMA female to SMA male

Z&X P/NO: 6000F00076-102

REV	UNIT	FILE:
X1	mm	SHEET: 1/1

Sivim.co.il